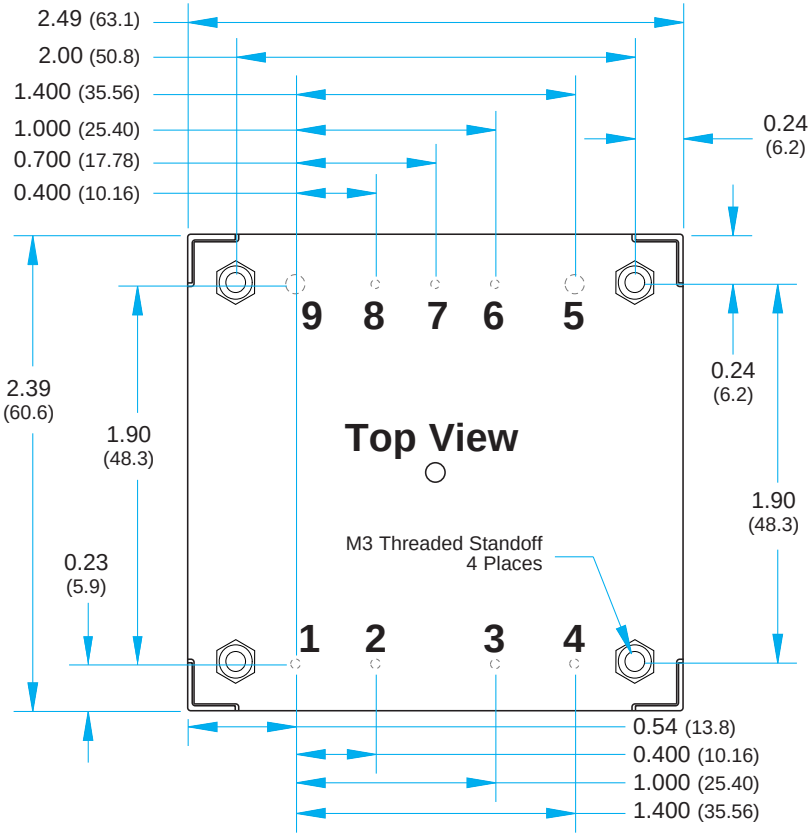
2.49 (63.1)
2.00 (50.8)
1.400 (35.56)
1.000 (25.40)
0.700 (17.78)
0.400 (10.16)
0.24
(6.2)
9 8 7 6 5
2.39
(60.6)
1.90
(48.3)
0.24
(6.2)
Top View
1.90
(48.3)
M3 Threaded Standoff
4 Places
0.23
(5.9)
1 2 3 4
0.54 (13.8)
0.400 (10.16)
1.000 (25.40)
1.400 (35.56)

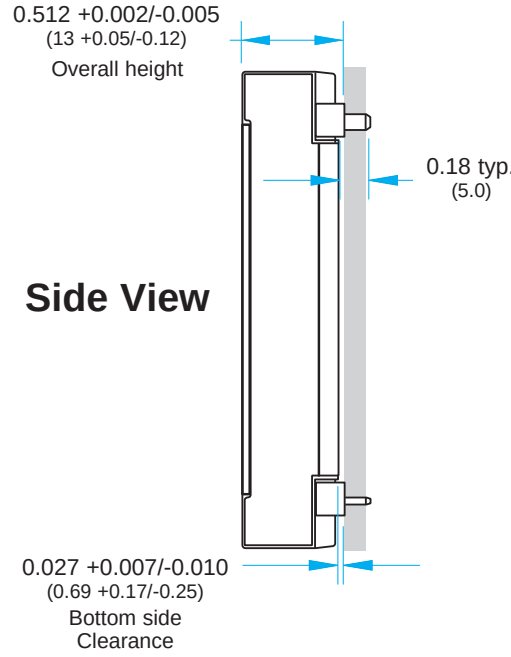
0.512 +0.002/-0.005
(13 +0.05/-0.12)
Overall height
0.18 typ.
(5.0)
Side View
0.027 +0.007/-0.010
(0.69 +0.17/-0.25)
Bottom side
Clearance